SOVEREIGN
WINDOWS & DOORS

325 Series Casement, Awning, Fixed Installation Instructions

Congratulations on your purchase of a Sovereign Windows product.

Through constant innovation and product development Sovereign are dedicated to supplying only the very best window materials available.

A good installation ensures lasting window performance

Building codes, environmental conditions, approved shop drawings may vary & supersede the procedures contained below. The responsibility for compliance is the project's owner(s), installers, architect, inspectors & building scientists.

Installation Items:

For windows supplied with or without reveals

1- Handle carefully

2- Store with non- abrasive separators between frames. Windows should be stored in a place protected from the weather

3- **Alterations –** Windows should not be load bearing after installation.

Windows should not be modified to accommodate air conditioners, exhaust fans, etc.

4- The product was developed & tested in a window wall interface system designed to manage water.

5- **Anchorage –** Window frames should be set plumb and square, shimmed & secured to surrounding structure. Window anchorage must be sufficient to meet structural requirements of the local building codes. Allow at least 25mm between the frame and the rough opening for shimming and adjustment. Always adjust anchor position, shimming thickness to maintain straight and parallel lines between sash and frame. Ensure adequate level support of the sill. Shims required to support interior & exterior of window frame at all anchors & especially at the sill.

Anchor options:

With Reveals: steps 1 to 5 and 7 to 10

Without Reveals: steps 1 to 5 and 6A to 10

If you have ordered your windows without reveals, suitable anchor points are required to be fitted. Depending on the frame profile you will be supplied as part of your window package metal anchors of type "A" .

A

Both types are attached to the frame by pressing the leading edge under the outside edge lip so as to produce Fig's 1& 2 which will result in a fixed position requiring no other means of attachment to the frame.

The appropriate anchor point distances are as per Fig 3

6A- Corner anchors – secure approximately 100mm maximum from the corners with screws or galvanized nails to the wall stud.

6B - Perimeter anchors – spacing should not exceed 600mm on the centre

6C - Mullion and transom anchors – always anchor within 100mm maximum from the mullion or transom (it is always a critical area for anchorage).

7- Perimeter cavities – between window frames and rough opening (R.O.) should be shimmed. Fixing by screws or galvanized nails should be over the metal anchors into the stud. Fill and paint as required.

Caution do not distort frame by over filling or over packing.

Note: An insulated cavity improves thermal performance.

8 - Caulk the exterior perimeter to provide a seal between wall and window to ensure continuity of weather tightness. (air barrier)

9 - Caulk and/or tape interior perimeter to promote continuity of the vapor barrier to minimize risk of condensation within the cavity and to meet tested air and water resistance levels.

10 -Maintenance – wash glass, frame and hardware with non- abrasive cleaner and water. Lubricate with only silicone lubricant all hardware and weather strip immediately after window is installed, and every 12 months to maintain ease of operation.

Alternative fixing method:

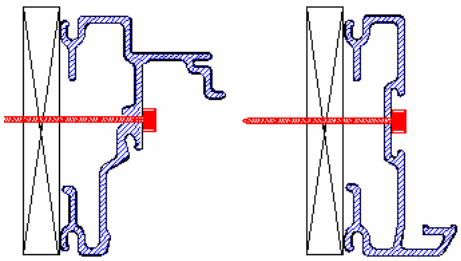

Anchor with # 8 or #10 stainless screws, directly to the stud via close fitting drilled hole

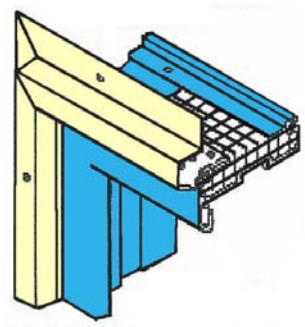

Nail fin and corner angles attached to the frame. Secured by nailing or # 8 stainless pan head

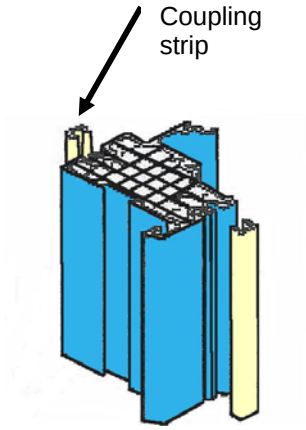

Connecting window combinations with coupling strip. Caulk the grove & snap in the coupling strip

Fig 1

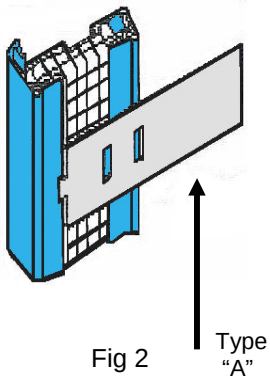

Fig 2

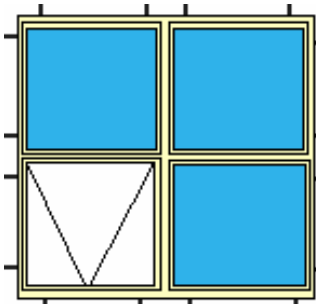

Fig 3

Sydney office:
Sovereign Windows & Doors Pty Limited
Unit 4 / 185 Briens Road
Northmead NSW
Australia 2152
ABN: 76 120 690 959

Phone: 02- 9630-8190
Fax: 02-9890-7133

Email: sales@sovereignwindows.com.au
Web site: www.sovereignwindows.com.au